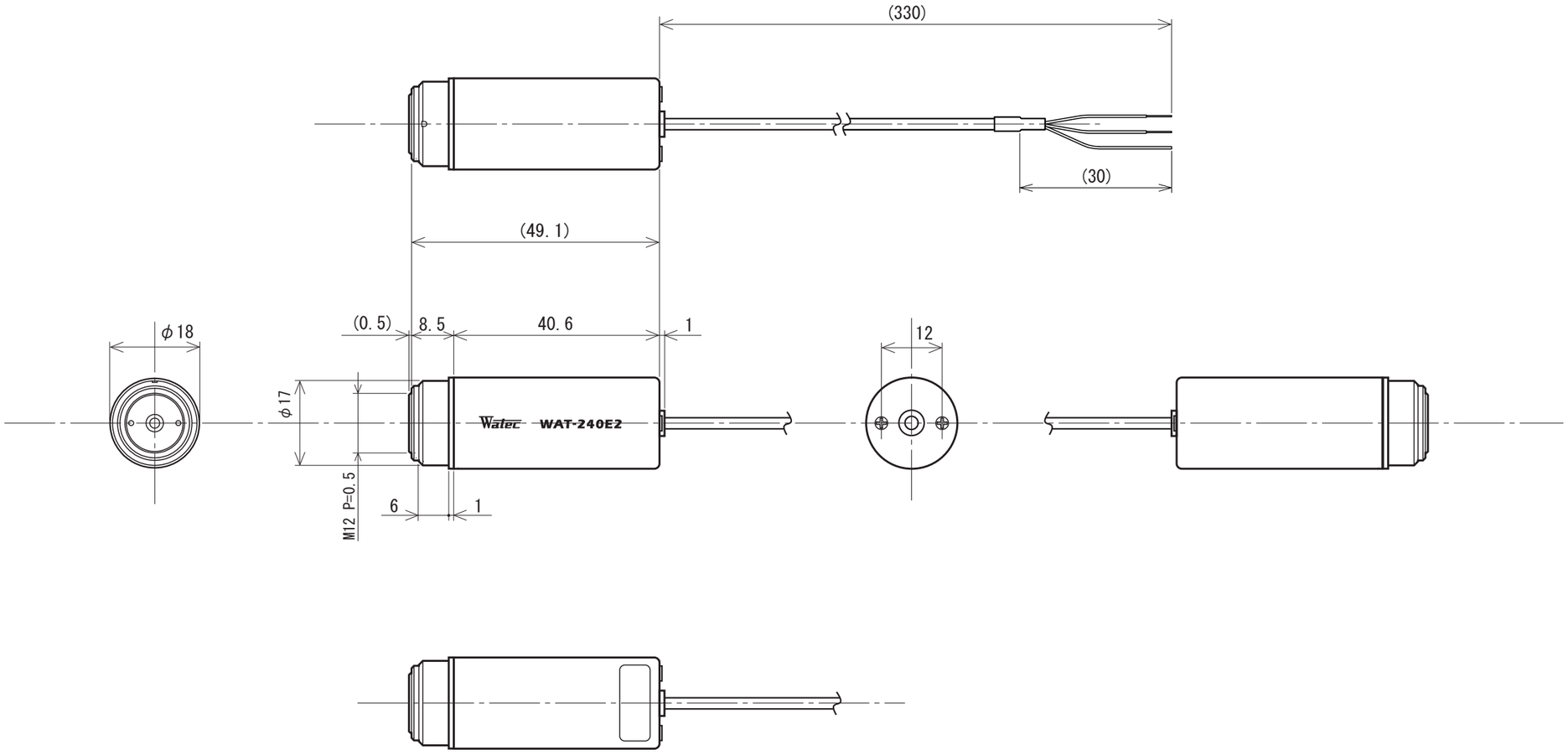# WAT-240E2(P3.7)